Edging and Covering Strips

Application:
For covering the profile t-slot or for clamping sheet elements. Suitable for panel thicknesses 4-5 mm.

Supplied Length: 2000 mm

Material: Polypropylene, natural or black
System: 40 - Slot 8
Length (mm): 2000
Type: Sealing, Coverstrips & Rubbers



Every care has been taken to ensure the accuracy of the information in this document, but we take no liability for any errors or omissions. We reserve the right to make changes without prior notice.

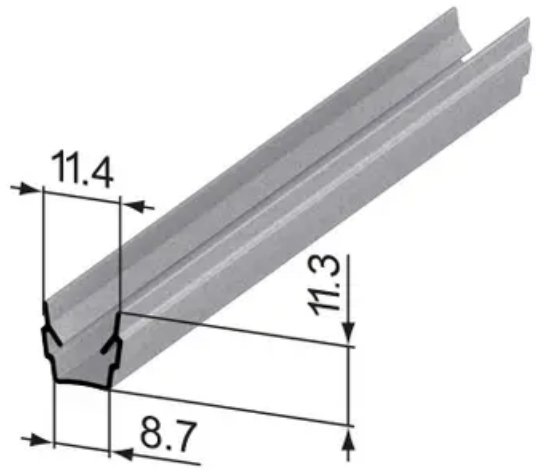

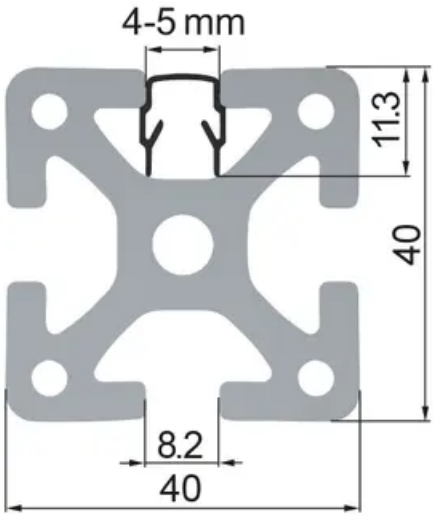

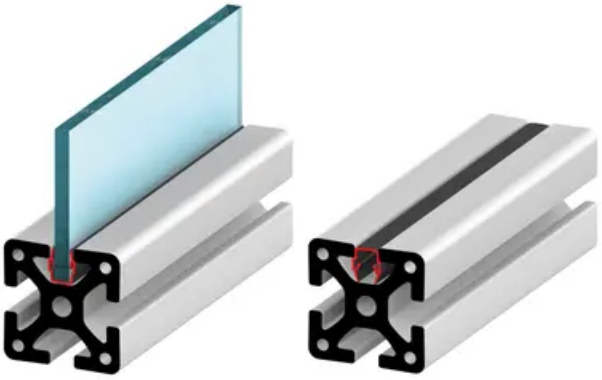

General Data

Designation	Description	System	Weight (g)
RA1275	Edging And Covering Strip 40, natural	40 - Slot 8	78
RA1280	Edging And Covering Strip 40, black	40 - Slot 8	78

Every care has been taken to ensure the accuracy of the information in this document, but we take no liability for any errors or omissions. We reserve the right to make changes without prior notice.