Tie Plate, steel

Application:
Universally applicable attachment elements for interconnecting profiles.

Material: Steel, black
System: 40 - Slot 8
Type: Angles Brackets and Corners; Fasteners



Every care has been taken to ensure the accuracy of the information in this document, but we take no liability for any errors or omissions. We reserve the right to make changes without prior notice.

General Data

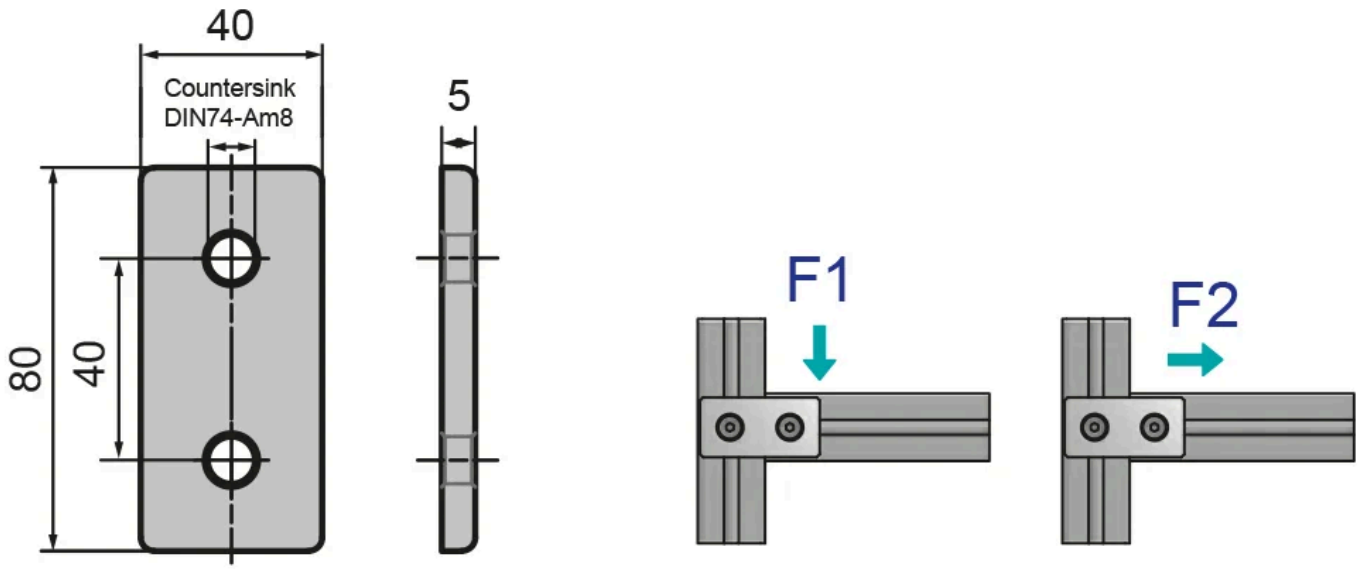

Designation	Description	System	F1 (N)	F2 (N)	Weight (g)
RA1120	Tie Plate 40 x 80, steel	40 - Slot 8	850	900	90

Every care has been taken to ensure the accuracy of the information in this document, but we take no liability for any errors or omissions. We reserve the right to make changes without prior notice.