Double T-Nuts 40/20

Application:
T-nut for swiveling into the groove. Fits into the t-slot at any point. For fixing of foot plates and any other accessories that require a fixing pitch of 40 mm x M8 (20 mm x M6 respectively) thread. Raised area fits into t-slot to stop twisting.
SV2202V: bore hole distance: 40 mm, thread: M8
SV2210V: bore hole distance: 20 mm, thread: M6



Material: Steel, zinc-plated
System: 40 - Slot 8
Type: T-nuts

Every care has been taken to ensure the accuracy of the information in this document, but we take no liability for any errors or omissions. We reserve the right to make changes without prior notice.

T-Nuts, slide-in



T-Nuts, push-in



T-Slot Strength

Information in regards to the maximum allowable t-slot load capability F. These values already include a safety factor (S > 2) against plastic deformation.

Profile type	Max. pull charge F
standard	5000 N
semi	2500 N
light	2000 N
superlight	1750 N



Every care has been taken to ensure the accuracy of the information in this document, but we take no liability for any errors or omissions. We reserve the right to make changes without prior notice.

General Data

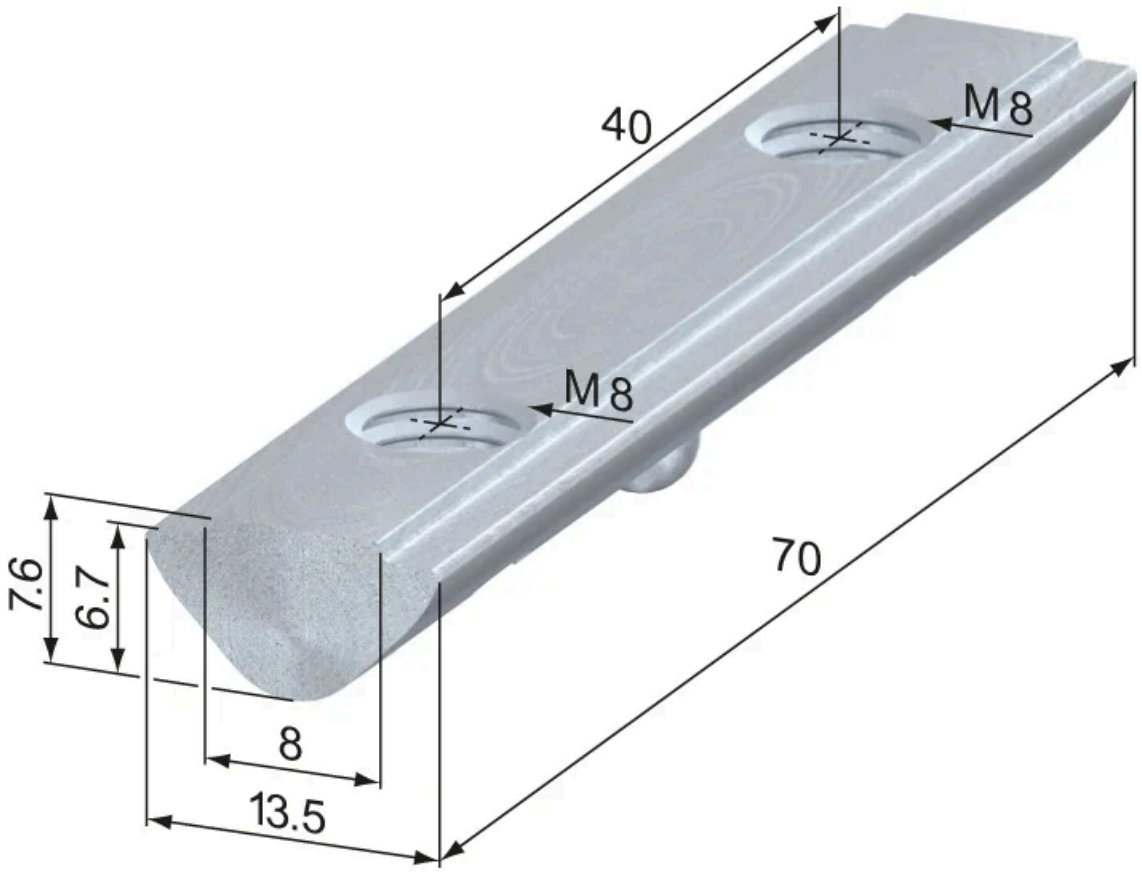

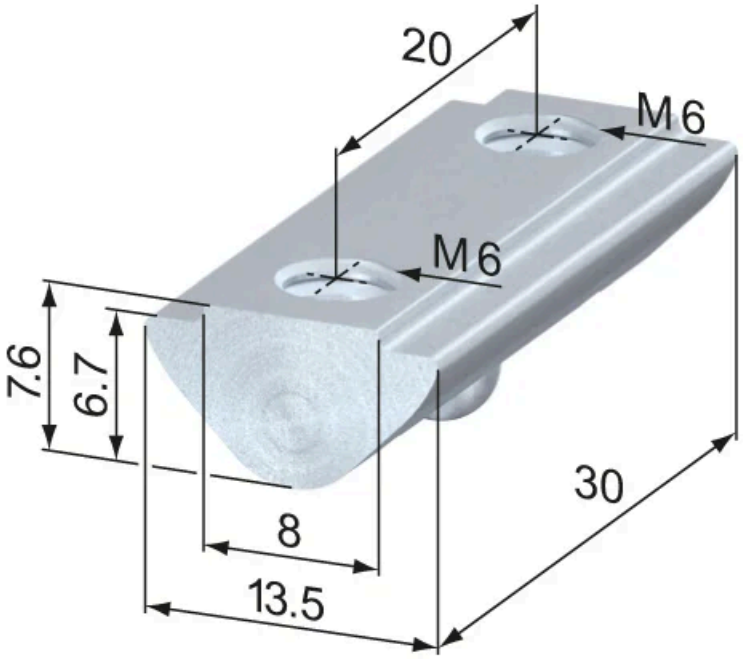

Designation	System	Thread
SV2202V	40 - Slot 8	40 M8
SV2210V	40 - Slot 8	20 M6

Every care has been taken to ensure the accuracy of the information in this document, but we take no liability for any errors or omissions. We reserve the right to make changes without prior notice.