Standard Fastener Set 8K

For mounting surface elements in the profile slot. An added benefit of the connector set is that you can do without extra notches in the surfaces. The connector supports a maximum tightening torque of 25.0 Nm.
To provide access to the screw head, we recommend drilling a hole (D = 7.0 mm) every 20.0 mm.
Set includes a galvanised M8x20 fillister head screw.



Material: Spacer, black POM. Fillister head screw, galvanised steel.
System: 40 - Slot 8
Type: Fasteners

Every care has been taken to ensure the accuracy of the information in this document, but we take no liability for any errors or omissions. We reserve the right to make changes without prior notice.

General Data

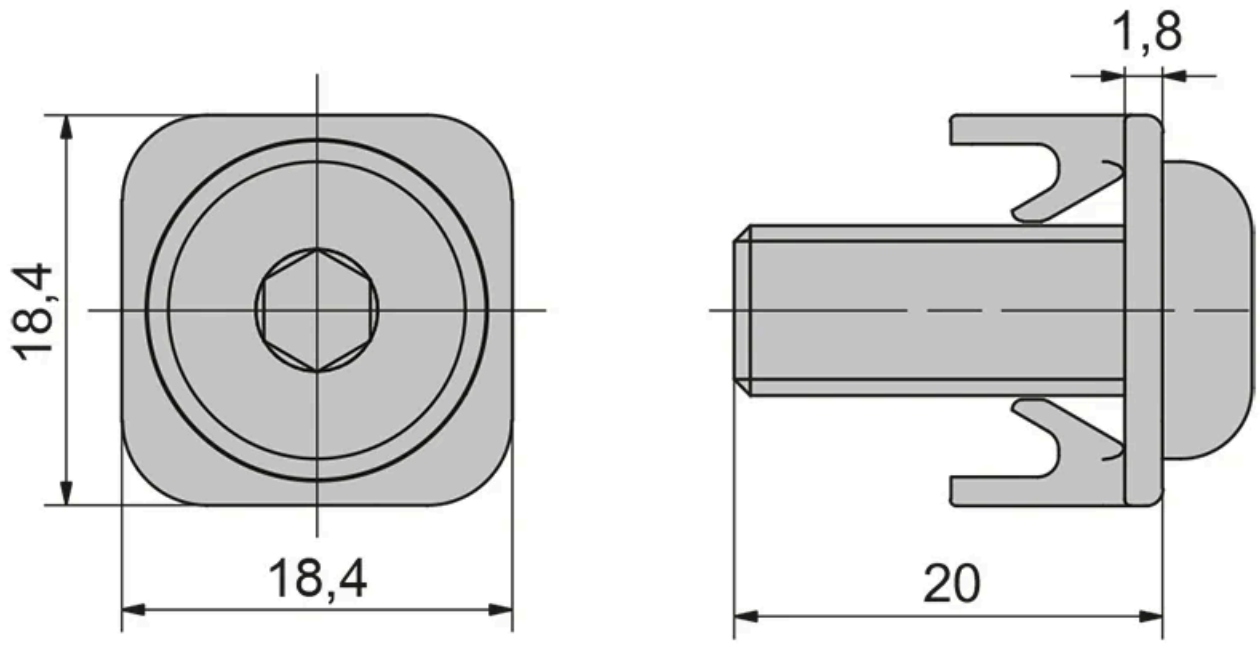

Designation	Description	System	Tightening Torque (Nm)
RF1021	Standard Fastener Set 8K	40 - Slot 8	25

Every care has been taken to ensure the accuracy of the information in this document, but we take no liability for any errors or omissions. We reserve the right to make changes without prior notice.