Door Latch

Low-profile door latch for use in the gap of swing doors. Its low height allows you to narrow down the door gap to 12 mm. The door latch snaps onto the head of a M6 cheese head screw (DIN912) which screws into a slot nut and, together with the slot nut, into the bottom of the opposite slot.
Match slots 6.



Material: Door latch; Die-cast zinc
Cover plate: Black plastic (PA)

System: 30 - Slot 6; 40 - Slot 8
Type: Door Latches & Interlocks

Every care has been taken to ensure the accuracy of the information in this document, but we take no liability for any errors or omissions. We reserve the right to make changes without prior notice.



General Data

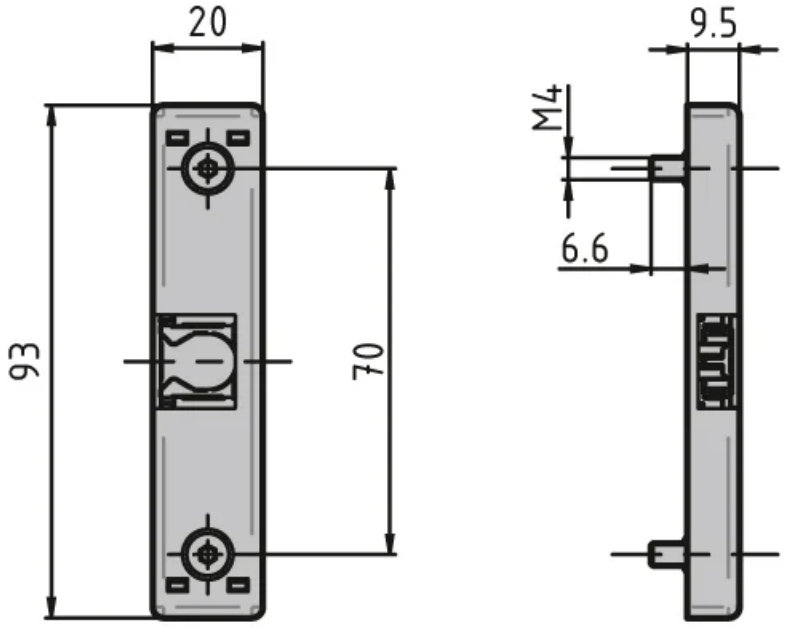

Designation	Description
RA5059	Door latch and cover plate

Every care has been taken to ensure the accuracy of the information in this document, but we take no liability for any errors or omissions. We reserve the right to make changes without prior notice.