Magnetic Door Stop

The magnetic stop mounts on the door slot and makes up a stop and an abutting wedge. After swinging in the door against the stop angle, the magnetic latch will hold it in place.

If profiles with closed slots are used, remember that you must remove the cover to install the slot nut and the anti-twist device.

Magnetic door stop with retaining plate and M5 × 14 countersunk screw

Material: Black plastic (PA6)
System: 40 - Slot 8
Type: Door Latches & Interlocks



Every care has been taken to ensure the accuracy of the information in this document, but we take no liability for any errors or omissions. We reserve the right to make changes without prior notice.

General Data

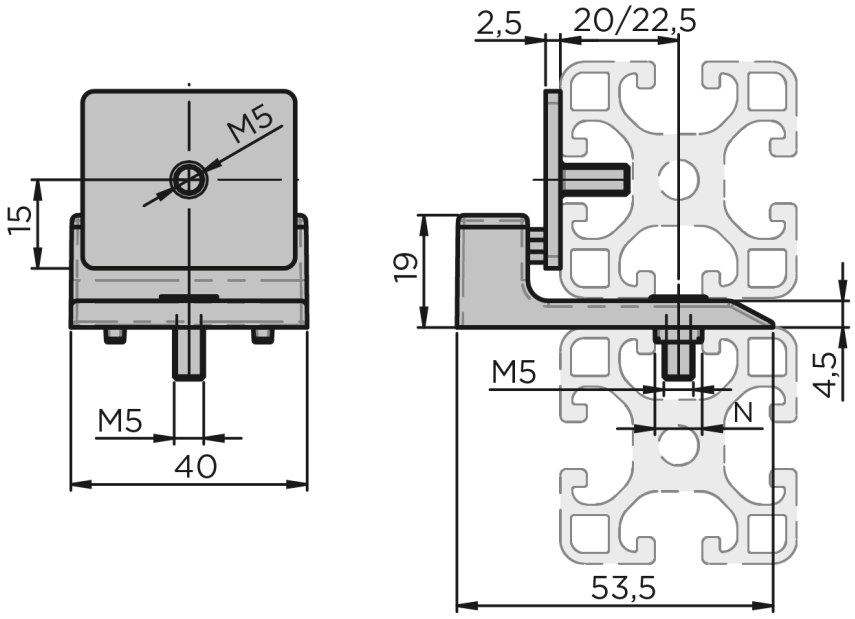

Designation	Description	Locking force (N)
RA2015	Magnetic Door Stop	30

Every care has been taken to ensure the accuracy of the information in this document, but we take no liability for any errors or omissions. We reserve the right to make changes without prior notice.