Emergency Door Lock Opener

Emergency release at the back of the Compact Catch Lock. Matches profiles 30,40.

Material: Base body and push-button: Plastic (PA6), fibreglass-reinforced
Unlocking bar: Steel

Colour: Base body: Black
Push-button: Red
Mount: By two M6 × 20 cheese head screws (DIN 912) at the front

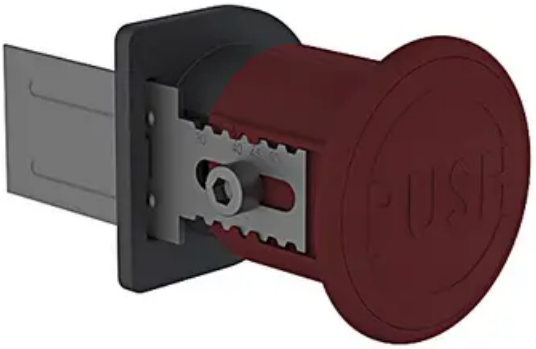

System: 40 - Slot 8; 30 - Slot 6
Type: Door Latches & Interlocks

Every care has been taken to ensure the accuracy of the information in this document, but we take no liability for any errors or omissions. We reserve the right to make changes without prior notice.

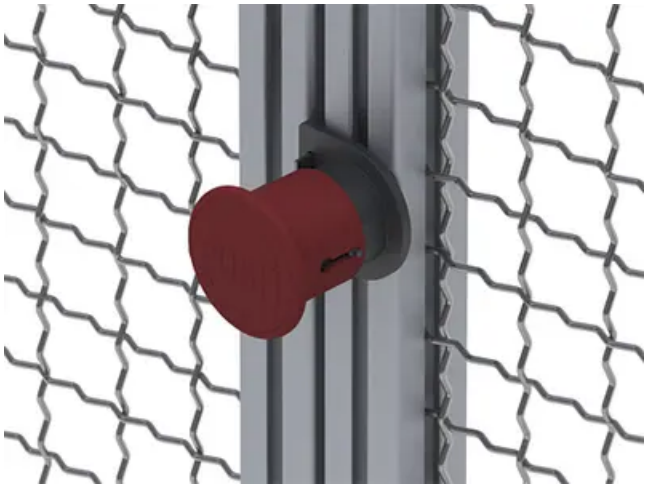

General Data

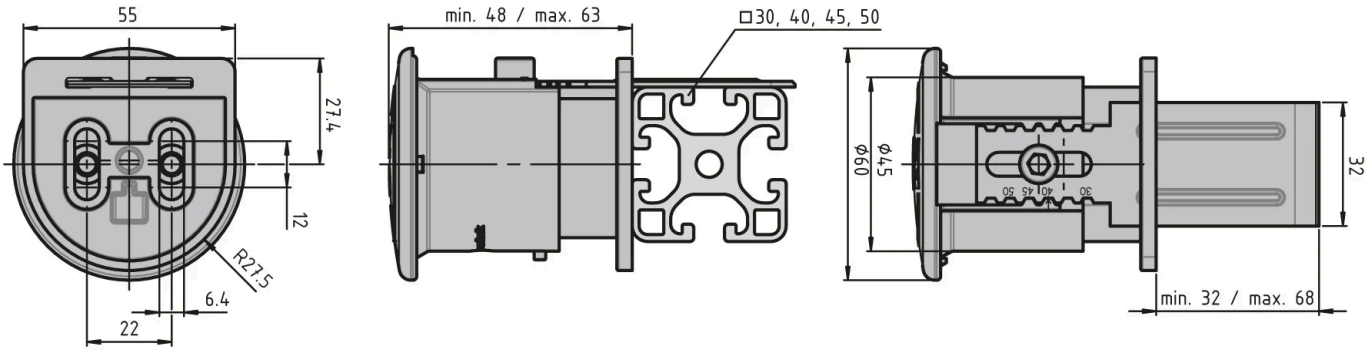

Designation	Description	Weight (g)
RA5050	Emergency catch lock opener	110.8

Every care has been taken to ensure the accuracy of the information in this document, but we take no liability for any errors or omissions. We reserve the right to make changes without prior notice.