Compact Double Door Lock

Easily and reliably locks doors and flaps. Installs without mechanical means; secured against disassembly when closed.
Selective access by using a single post.
With separate slot fasteners for slot 8 and slot 10
Material: Die-cast aluminium
Surface: Black powder coated
Mount: By M6 cheese head or fillister head screw at the front



Alike lock = identical keys for all locks. Individual = separate key for every lock.

System: 40 - Slot 8; 30 - Slot 6
Type: Door Latches & Interlocks

Every care has been taken to ensure the accuracy of the information in this document, but we take no liability for any errors or omissions. We reserve the right to make changes without prior notice.



General Data

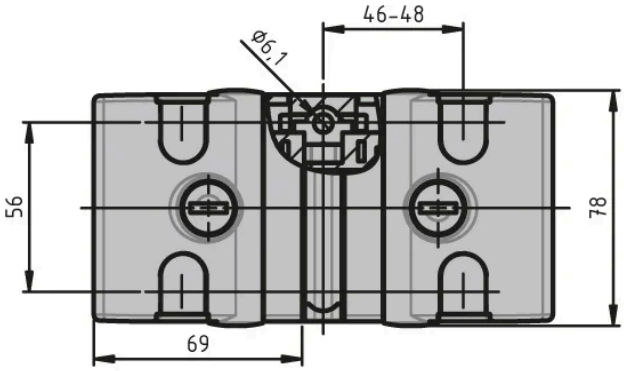

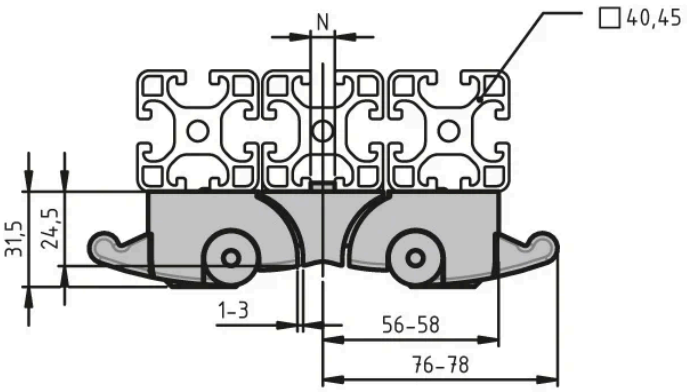

Designation	Description	Weight (g)	Lock
RA5041	Compact double door lock	448	Alike
RA5042	Compact double door lock	448	Individual

Every care has been taken to ensure the accuracy of the information in this document, but we take no liability for any errors or omissions. We reserve the right to make changes without prior notice.