NBR Cover Profiles

For covering aluminium profiles.
Use as a non-slip cover on steps, as a footrest, stopper for sliding doors etc.
Material: Plastic (NBR)

System: 30 - Slot 6
Type: Sealing, Coverstrips & Rubbers



Every care has been taken to ensure the accuracy of the information in this document, but we take no liability for any errors or omissions. We reserve the right to make changes without prior notice.

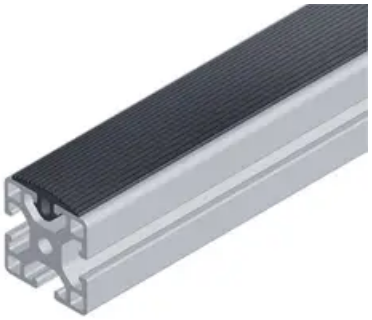

General Data

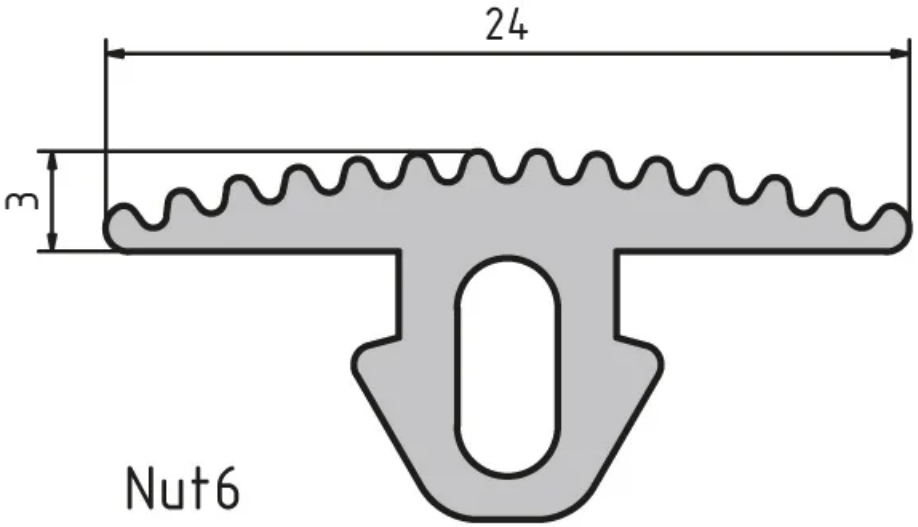

Designation	Description	System
PZ3901	NBR cover profile	30 - Slot 6

Every care has been taken to ensure the accuracy of the information in this document, but we take no liability for any errors or omissions. We reserve the right to make changes without prior notice.