Combination Hinge of Stainless Steel

To hinge panels or aluminium profiles.
Material: Wing: Stainless steel SS316, Axle: Stainless steel SS430 F
On site mount: From the front, using M4 countersunk screws

System: 20 - Slot 5
Type: Hinges



Every care has been taken to ensure the accuracy of the information in this document, but we take no liability for any errors or omissions. We reserve the right to make changes without prior notice.



General Data

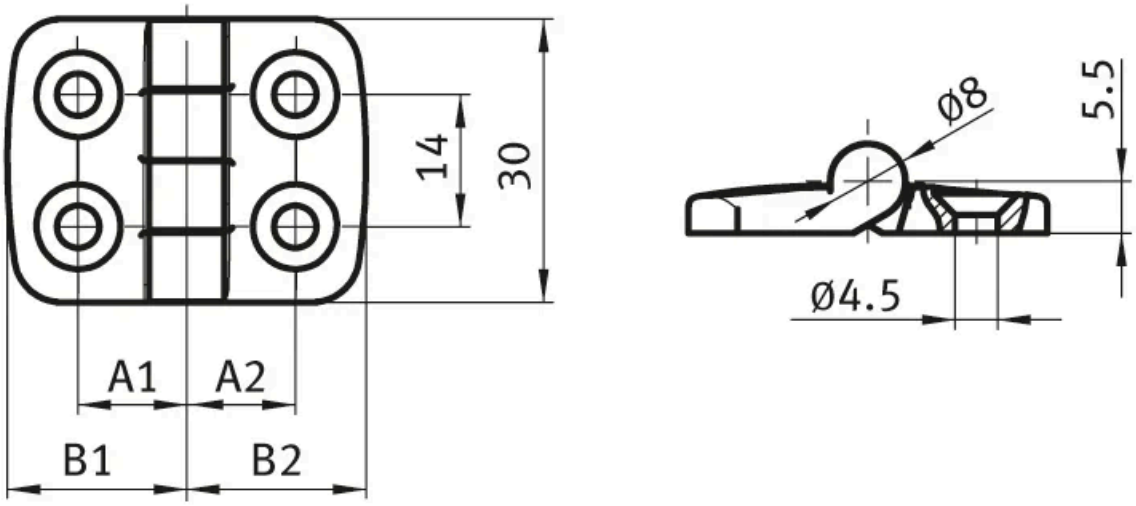

Designation	Description	System	Weight (g)	FAmax (N)	FRmax (N)
PZ5235	Combination Hinge system 20, stainless steel	20 - Slot 5	138	450	700

Designation	A1/A2	B1/B2
PZ5235	11.5/11.5	19/19

Every care has been taken to ensure the accuracy of the information in this document, but we take no liability for any errors or omissions. We reserve the right to make changes without prior notice.