# Runner

Guides moving parts along the aluminium profile slot.
Material: Runner: Plastic (PA), glass bead-reinforced
Socket: Galvanised steel
Washer: Galvanised steel

**System:** 30 - Slot 6; 20 - Slot 5
**Type:** System Gliders and Rollers




Every care has been taken to ensure the accuracy of the information in this document, but we take no liability for any errors or omissions. We reserve the right to make changes without prior notice.

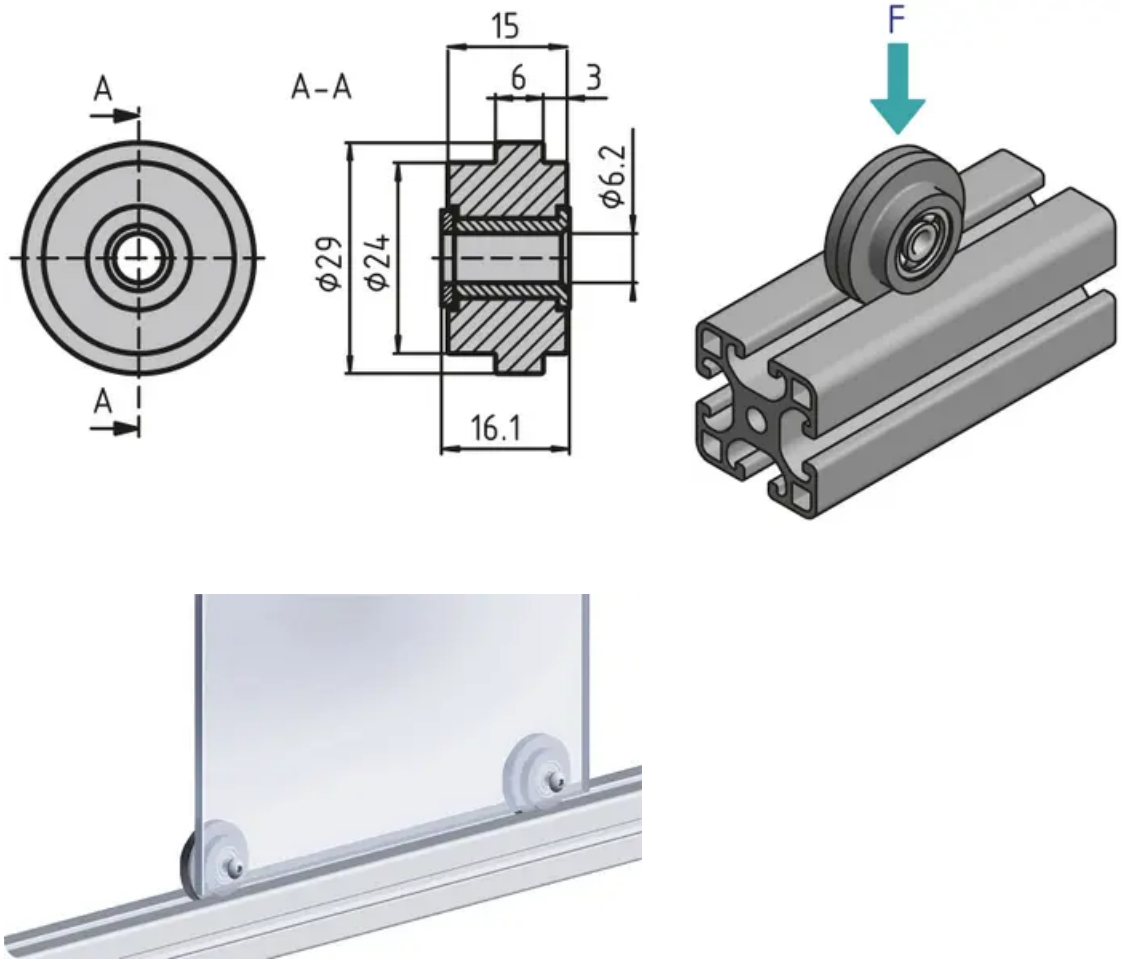


## General Data

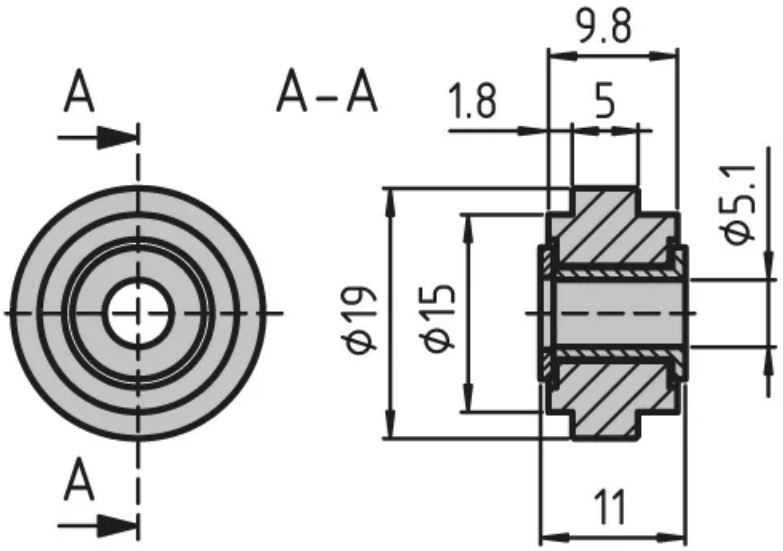


| Designation | System | D | F (N) |
|---|---|---|---|
| **PZ4060** | 20 - Slot 5 | 19 | 100 |
| **PZ3245** | 30 - Slot 6 | 29 | 250 |


Every care has been taken to ensure the accuracy of the information in this document, but we take no liability for any errors or omissions. We reserve the right to make changes without prior notice.