Corner Angle 30

Right-angled links between up to three square or semi-circular profiles of the same cross section.Square or round caps for protection against injury and dirt.

Material: Corner angle: Uncoated die-cast zinc
Caps: plastic (PA).

Note: The caps in the sets are not ESD-ready.

System: 30 - Slot 6
Type: Angles Brackets and Corners; Fasteners

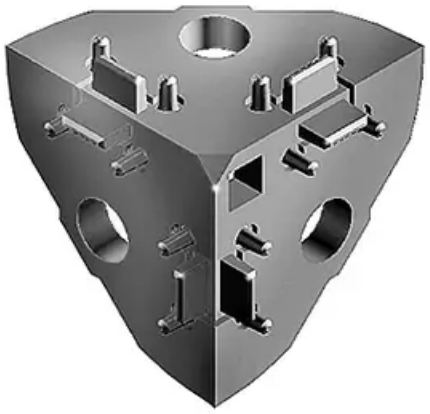

Every care has been taken to ensure the accuracy of the information in this document, but we take no liability for any errors or omissions. We reserve the right to make changes without prior notice.

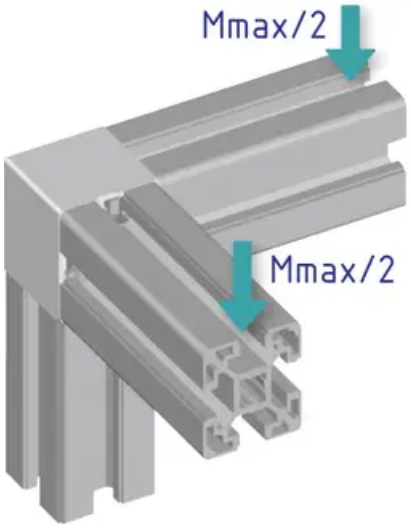





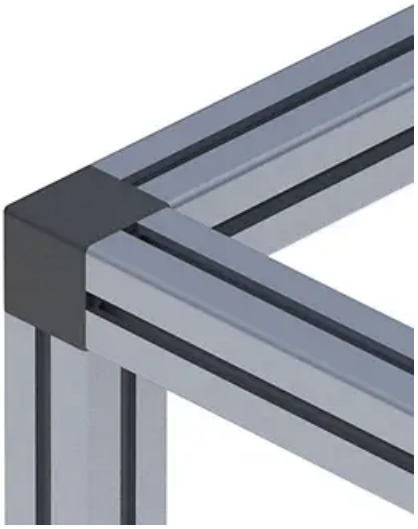



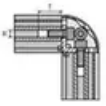

Machining of corner angles	5 Profile 20x20	6 Profile 30x30
Thread (M)	M5	M6
Depth (T)	25 mm	25 mm

Every care has been taken to ensure the accuracy of the information in this document, but we take no liability for any errors or omissions. We reserve the right to make changes without prior notice.

General Data

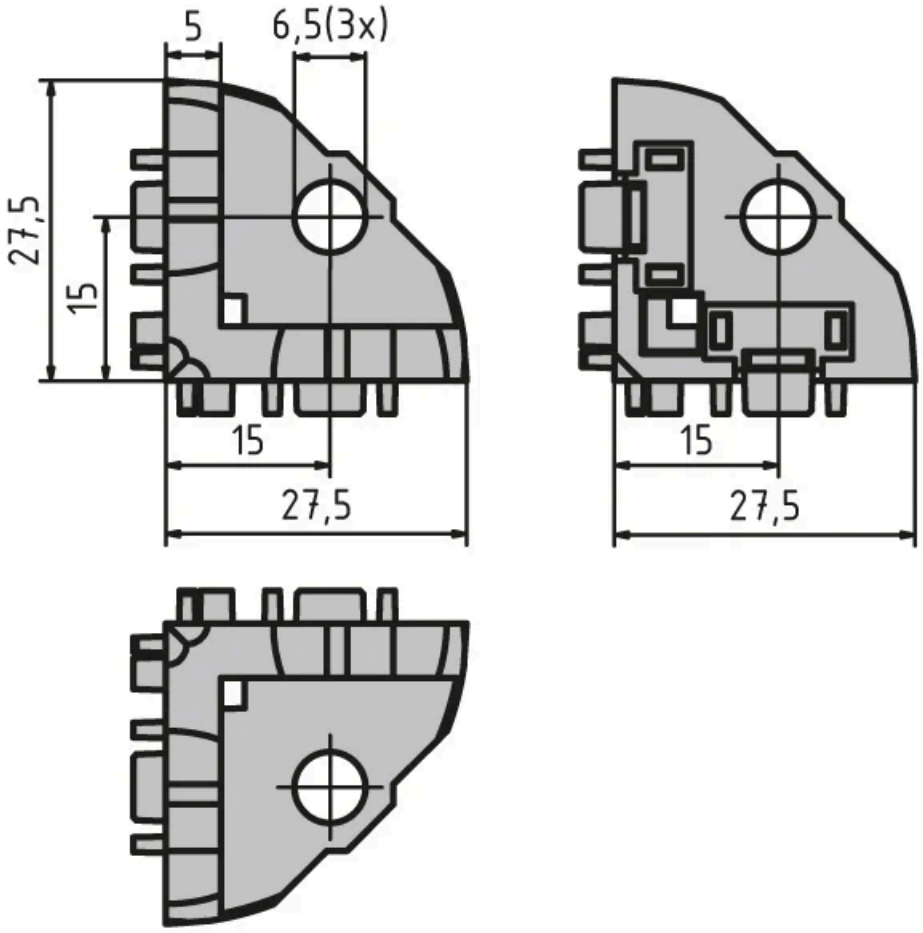

Designation	Description	System	F (Nm)	ESD
PZ5017	Corner angle 30 including 3 M6 × 16 screws (ISO 7380)	30 - Slot 6	40	Yes
PV1076	Corner angle 30 including 3 M6 × 16 screws (ISO 7380) and square black cap	30 - Slot 6	40	Yes
PZ5018	Corner angle 30 including 3 M6 × 16 screws (ISO 7380) and square grey cap (RAL7004)	30 - Slot 6	40	Yes
PZ5298	Corner angle 30 including 3 M6 × 16 screws (ISO 7380) and round black cap	30 - Slot 6	40	Yes
PA1208	Round black cap	30 - Slot 6	-	-
PA1209	Square black cap	30 - Slot 6	-	-
PA1210	Square grey cap (RAL7004)	30 - Slot 6	-	-

Every care has been taken to ensure the accuracy of the information in this document, but we take no liability for any errors or omissions. We reserve the right to make changes without prior notice.