Corner Angle 20

Right-angled links between up to three square or semi-circular profiles of the same cross section.Square or round caps for protection against injury and dirt.

Material: Corner angle: Uncoated die-cast zinc
Caps: plastic (PA).

Note: The caps in the sets are not ESD-ready.

System: 20 - Slot 5
Type: Angles Brackets and Corners; Fasteners

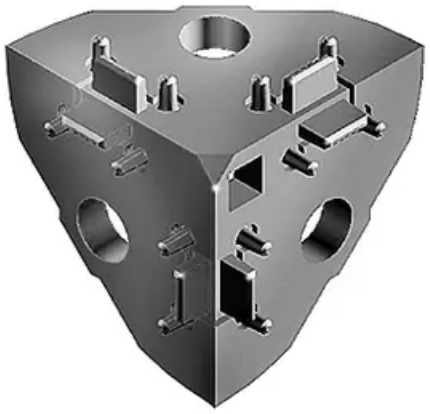

Every care has been taken to ensure the accuracy of the information in this document, but we take no liability for any errors or omissions. We reserve the right to make changes without prior notice.

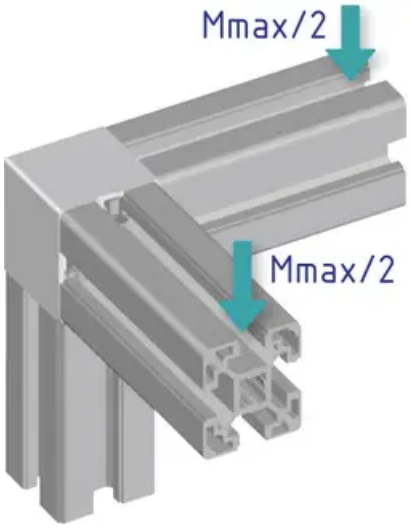





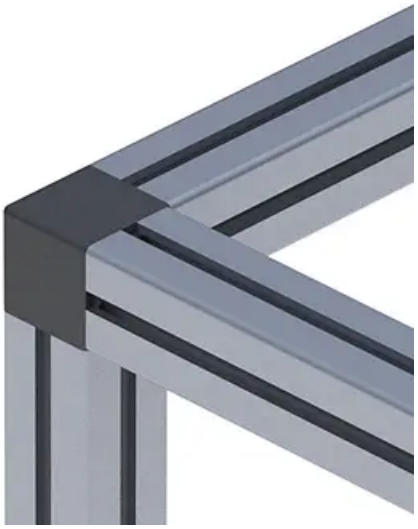



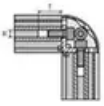

Machining of corner angles	5 Profile 20x20	6 Profile 30x30
Thread (M)	M5	M6
Depth (T)	25 mm	25 mm

Every care has been taken to ensure the accuracy of the information in this document, but we take no liability for any errors or omissions. We reserve the right to make changes without prior notice.

General Data

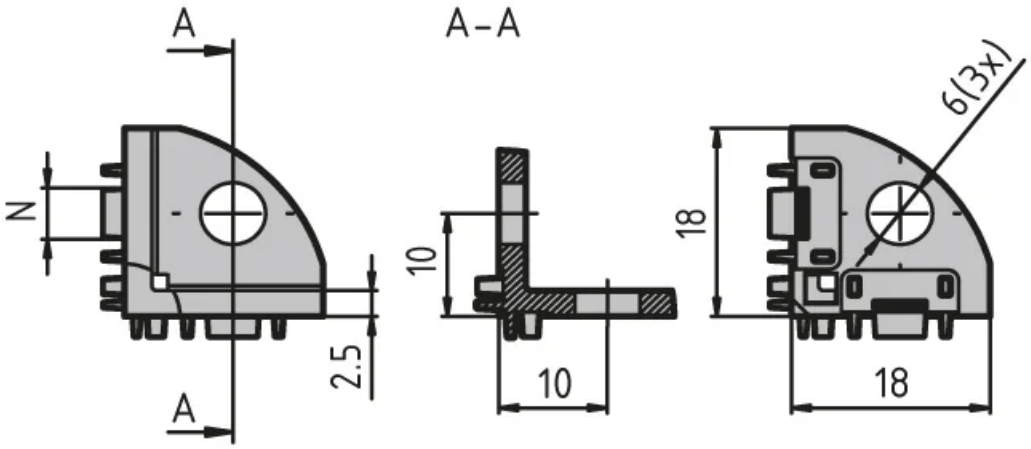

Designation	Description	System	F (Nm)	ESD
PZ5014	Corner angle 20 including 3 M5 × 12 screws (ISO 7380)	20 - Slot 5	12	Yes
PZ5015	Corner angle 20 including 3 M5 × 12 screws (ISO 7380) and square black cap	20 - Slot 5	12	Yes
PZ5016	Corner angle 20 including 3 M5 × 12 screws (ISO 7380) and round black cap	20 - Slot 5	12	Yes
PA1206	Round black cap	20 - Slot 5	-	-
PA1207	Square black cap	20 - Slot 5	-	-

Every care has been taken to ensure the accuracy of the information in this document, but we take no liability for any errors or omissions. We reserve the right to make changes without prior notice.