Universal Connectors

Links two aluminium profiles. Supplied with slot nut and screw.
Material: Galvanised die-cast zinc
Dummy plug material: PVC, black

System: 30 - Slot 6; 20 - Slot 5
Type: Fasteners



Every care has been taken to ensure the accuracy of the information in this document, but we take no liability for any errors or omissions. We reserve the right to make changes without prior notice.

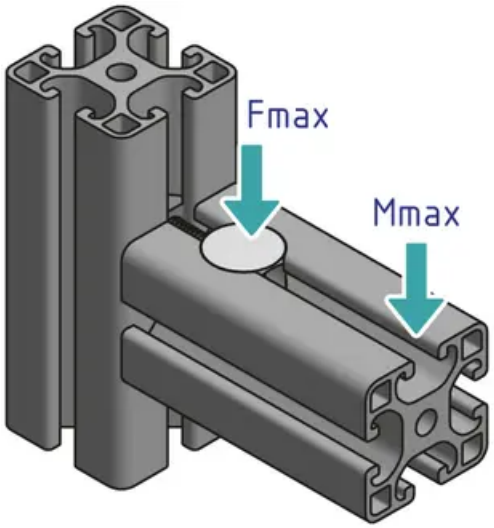





General Data

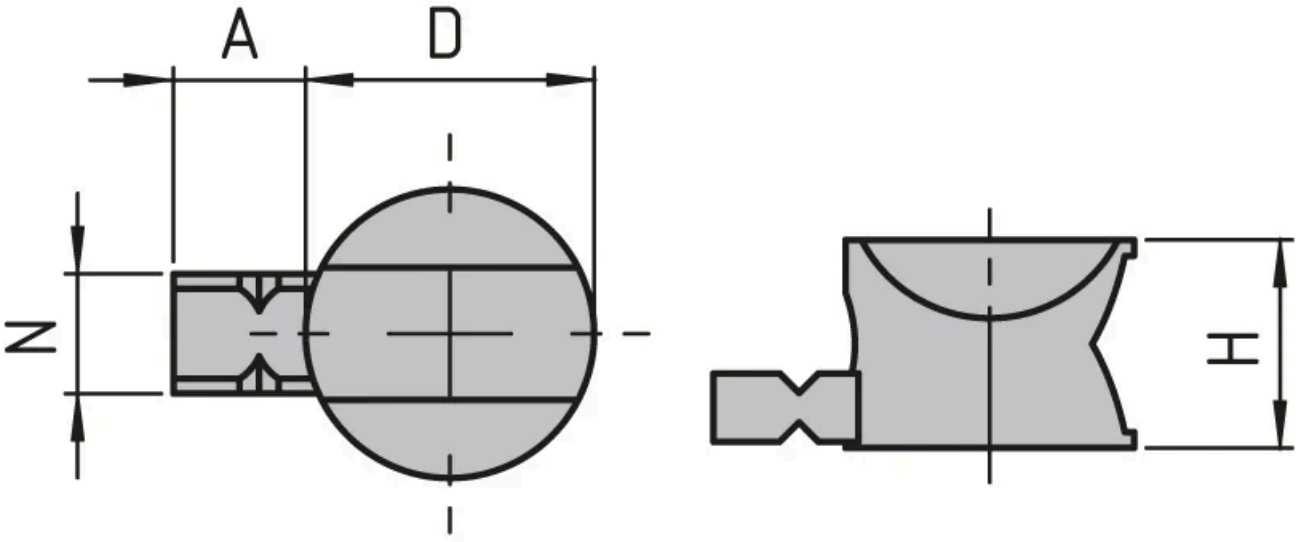

Designation	Description	System	A	D	H
PV4020	Set of universal connectors with guide lug and 4 mm hole; M4 slot nut and cheese head screw included	20 - Slot 5	5.4	11.8	8.5

Every care has been taken to ensure the accuracy of the information in this document, but we take no liability for any errors or omissions. We reserve the right to make changes without prior notice.

Designation	Description	System	A	D	H
PV3015	Set of universal connectors with guide lug and 6 mm hole; M6 slot nut and cheese head screw included	30 - Slot 6	9.3	15.7	12.5

Designation	Fmax (N)	Mmax (Nm)
PV4020	400	12
PV3015	1250	35

Every care has been taken to ensure the accuracy of the information in this document, but we take no liability for any errors or omissions. We reserve the right to make changes without prior notice.