# DBN28

Full extension consisting of two guide rails, both fixed and movable, and two sliders which together form the intermediate element. The size is similar to the DE series and offers good protection from dirt of the open ballcage.



Special strokes are defined as deviations from standard stroke H. See section "Special strokes" in the document Technical Information for Telescopic Rail Heavy.

System Load Capacity Radial and System Load Capacity Axial values refers to a pair of rails. Dimensions in mm.

See Technical Information for further details, operating conditions and installation instructions.


Every care has been taken to ensure the accuracy of the information in this document, but we take no liability for any errors or omissions. We reserve the right to make changes without prior notice.

# General Data

DBN28

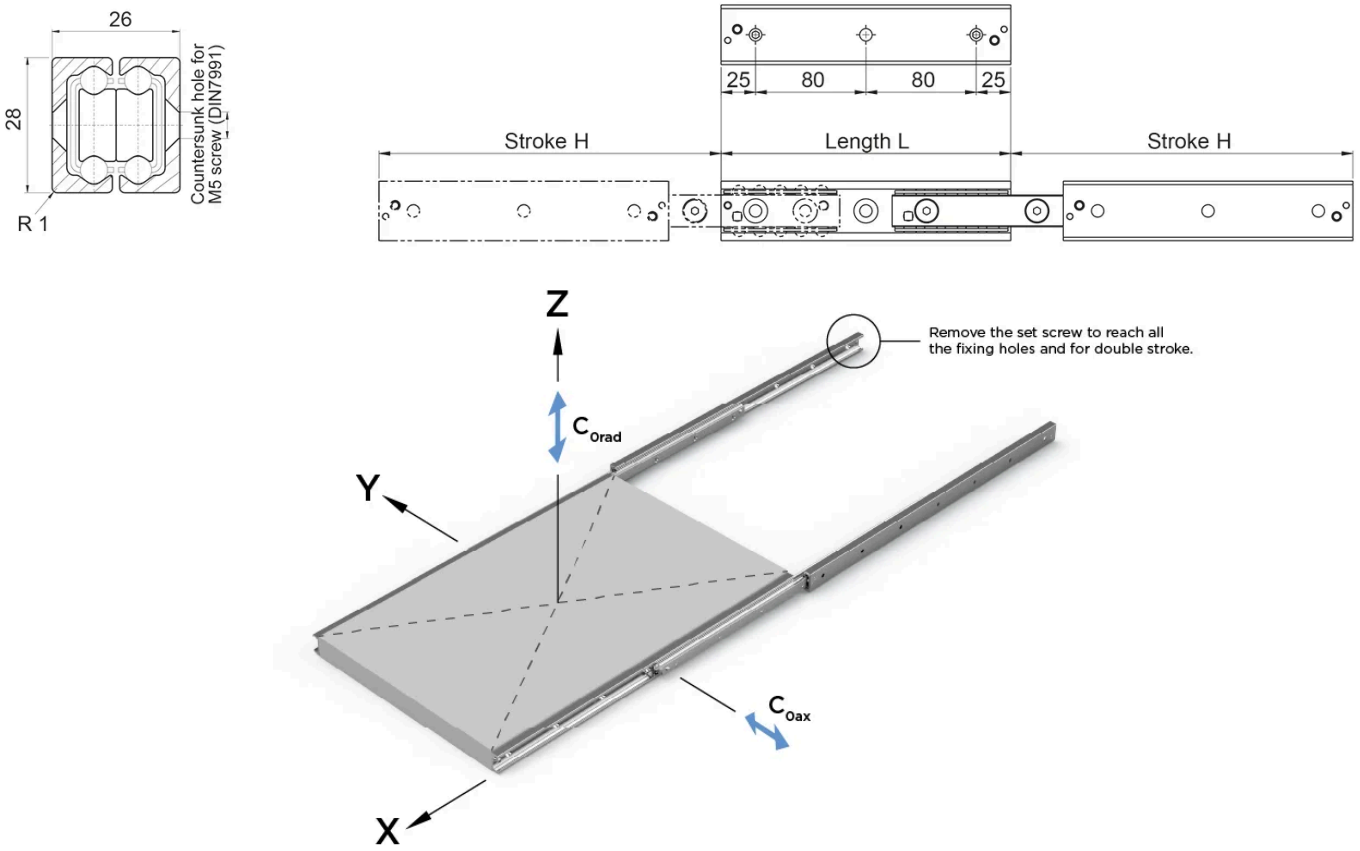


| Designation | Length | Stroke | Weight (kg/m) | System Load Capacity Radial (N) | System Load Capacity Axial (N) |
|---|---|---|---|---|---|
| **DBN28-130** | 130 | 148 | 4.04 | 470 | 328 |
| **DBN28-210** | 210 | 232 | 4.04 | 864 | 604 |
| **DBN28-290** | 290 | 296 | 4.04 | 1244 | 1074 |
| **DBN28-370** | 370 | 380 | 4.04 | 964 | 964 |
| **DBN28-450** | 450 | 464 | 4.04 | 786 | 786 |
| **DBN28-530** | 530 | 548 | 4.04 | 664 | 664 |
| **DBN28-610** | 610 | 633 | 4.04 | 572 | 572 |
| **DBN28-690** | 690 | 717 | 4.04 | 504 | 504 |
| **DBN28-770** | 770 | 801 | 4.04 | 452 | 452 |
| **DBN28-850** | 850 | 866 | 4.04 | 426 | 426 |
| **DBN28-930** | 930 | 950 | 4.04 | 388 | 388 |
| **DBN28-1010** | 1010 | 1034 | 4.04 | 356 | 356 |
| **DBN28-1090** | 1090 | 1118 | 4.04 | 328 | 328 |
| **DBN28-1170** | 1170 | 1202 | 4.04 | 304 | 304 |

| Designation | Number of Fixing Holes |
|---|---|
| **DBN28-130** | 2 |
| **DBN28-210** | 3 |
| **DBN28-290** | 4 |
| **DBN28-370** | 5 |


Every care has been taken to ensure the accuracy of the information in this document, but we take no liability for any errors or omissions. We reserve the right to make changes without prior notice.

| Designation | Number of Fixing Holes |
|---|---|
| **DBN28-450** | 6 |
| **DBN28-530** | 7 |
| **DBN28-610** | 8 |
| **DBN28-690** | 9 |
| **DBN28-770** | 10 |
| **DBN28-850** | 11 |
| **DBN28-930** | 12 |
| **DBN28-1010** | 13 |
| **DBN28-1090** | 14 |
| **DBN28-1170** | 15 |


Every care has been taken to ensure the accuracy of the information in this document, but we take no liability for any errors or omissions. We reserve the right to make changes without prior notice.