# ASN63

Partial extension consisting of a guide rail and a slider. This compact size and simple design allow very high load capacities. The high system rigidity is formed in connection with the adjacent construction.



Special strokes are defined as deviations from standard stroke H. See section "Special strokes" in the document Technical Information for Telescopic Rail Heavy.

Dimensions in mm.

System Load Capacity Radial, System Load Capacity Axial, System Moment Capacity My and System Moment Capacity Mz values refers to a pair of rails.

Mx moment value refers to a single rail. The Mx system capacity depends on the width of the system and the load capacity radial.

See Technical Information for further details, operating conditions and installation instructions.


Every care has been taken to ensure the accuracy of the information in this document, but we take no liability for any errors or omissions. We reserve the right to make changes without prior notice.

# General Data

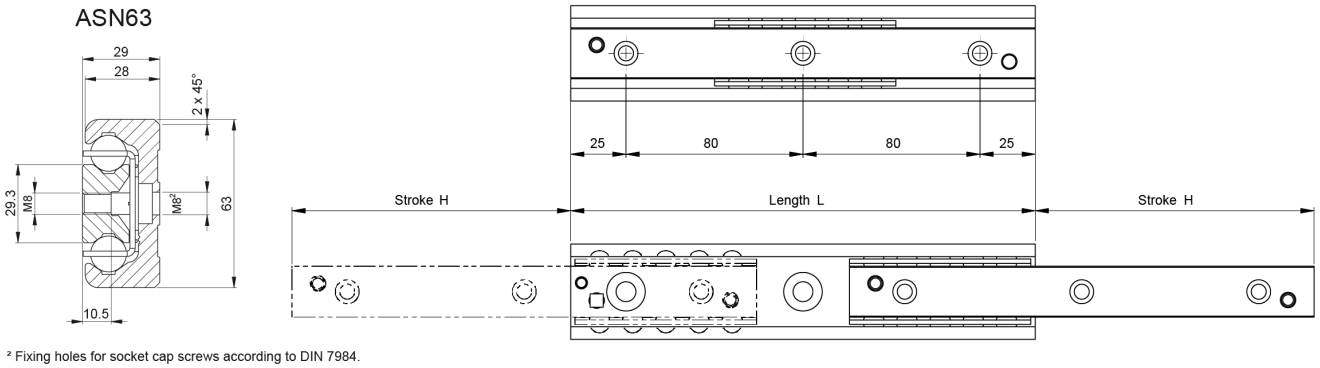


² Fixing holes for socket cap screws according to DIN 7984.

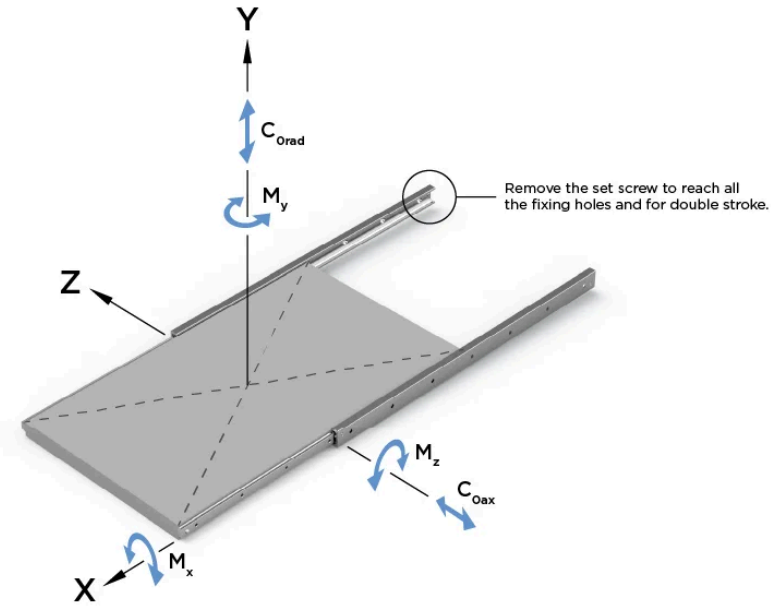


| Designation | Length | Stroke | Weight (kg/m) | System Load Capacity Radial (N) | System Load Capacity Axial (N) |
|---|---|---|---|---|---|
| **ASN63-610** | 610 | 333 | 10.3 | 21182 | 14828 |
| **ASN63-690** | 690 | 373 | 10.3 | 25068 | 17548 |
| **ASN63-770** | 770 | 413 | 10.3 | 28978 | 20284 |
| **ASN63-850** | 850 | 453 | 10.3 | 32904 | 23032 |
| **ASN63-930** | 930 | 493 | 10.3 | 36842 | 25790 |
| **ASN63-1010** | 1010 | 533 | 10.3 | 40790 | 28554 |
| **ASN63-1090** | 1090 | 573 | 10.3 | 44746 | 31322 |
| **ASN63-1170** | 1170 | 613 | 10.3 | 48708 | 34096 |
| **ASN63-1250** | 1250 | 653 | 10.3 | 52674 | 36872 |
| **ASN63-1330** | 1330 | 693 | 10.3 | 56644 | 39650 |
| **ASN63-1410** | 1410 | 733 | 10.3 | 60618 | 42432 |
| **ASN63-1490** | 1490 | 773 | 10.3 | 64594 | 45216 |
| **ASN63-1570** | 1570 | 813 | 10.3 | 68574 | 48002 |
| **ASN63-1650** | 1650 | 853 | 10.3 | 72554 | 50788 |
| **ASN63-1730** | 1730 | 893 | 10.3 | 76536 | 53576 |
| **ASN63-1810** | 1810 | 933 | 10.3 | 80522 | 56364 |
| **ASN63-1890** | 1890 | 973 | 10.3 | 84506 | 59154 |


Every care has been taken to ensure the accuracy of the information in this document, but we take no liability for any errors or omissions. We reserve the right to make changes without prior notice.

| Designation | Length | Stroke | Weight (kg/m) | System Load Capacity Radial (N) | System Load Capacity Axial (N) |
|---|---|---|---|---|---|
| **ASN63-1970** | 1970 | 1013 | 10.3 | 88494 | 61946 |

| Designation | System Moment Capacity My (Nm) | System Moment Capacity Mz (Nm) | Mx moment (Nm) | Number of Fixing Holes |
|---|---|---|---|---|
| **ASN63-610** | 3106 | 4438 | 474 | 8 |
| **ASN63-690** | 4144 | 5920 | 547.5 | 9 |
| **ASN63-770** | 5332 | 7616 | 621 | 10 |
| **ASN63-850** | 6668 | 9526 | 294.5 | 11 |
| **ASN63-930** | 8154 | 11648 | 768 | 12 |
| **ASN63-1010** | 9788 | 13984 | 841.4 | 13 |
| **ASN63-1090** | 11574 | 16534 | 914.9 | 14 |
| **ASN63-1170** | 13508 | 19296 | 988.4 | 15 |
| **ASN63-1250** | 15590 | 22272 | 1061.9 | 16 |
| **ASN63-1330** | 17824 | 25462 | 1135.4 | 17 |
| **ASN63-1410** | 20204 | 28864 | 1208.9 | 18 |
| **ASN63-1490** | 22736 | 32480 | 1282.4 | 19 |
| **ASN63-1570** | 25416 | 36310 | 1355.9 | 20 |
| **ASN63-1650** | 28246 | 40352 | 1429.4 | 21 |
| **ASN63-1730** | 31226 | 44608 | 1502.8 | 22 |
| **ASN63-1810** | 34354 | 49078 | 1576.3 | 23 |
| **ASN63-1890** | 37632 | 53760 | 1649.8 | 24 |
| **ASN63-1970** | 41060 | 58656 | 1723.3 | 25 |


Every care has been taken to ensure the accuracy of the information in this document, but we take no liability for any errors or omissions. We reserve the right to make changes without prior notice.