PSW 31 - Shaft 8 mm solid



• Positioning system with IP 68
• Absolute measuring system, without battery
• Galvanically separated supply voltages between control and motor and bus
• Absolute encoder eliminates the need for reference runs during system setup and installation of replacements
• Easy address assignment directly on the device using integrated address switches (not for IO-Link)
• Manual disconnecting lever permits manual disconnection of the gearbox
• Regulation of the current torque prevents overloading and unnecessary run aborts
• Strong breakaway torque enables safe start-up even after an extended standstill
• Intelligent running behaviour. Recognises the difference between obstacles and dirt
• Spindle offset run: Excludes inconsistencies due to lash in the spindle
• Condition monitoring of supply voltage, drag error (permits optimum adjustment of current position), power consumption and torque
• Partial safety function for STO (Safe Torque Off)

Dimensions in mm.

Type: Vertical
Nominal Voltage (V DC): 24 (± 10 %)
Nominal Current (A): 2.2
Output Shaft (mm): 8
Output Shaft Type: Solid
BUS Communication: Can Open (CA); Profi Bus (DP); Device Net (DN); Modbus (MB); IO-Link (IO); ProfiNet (PN); Sercos (SE); EtherCat (EC); Ethernet IP (EI); PowerLink (PL)
Electrical connection: "Standard; with jog keys; 1 connector Y-encoded or 1 connector Y-encoded with jog keys"
Protection Class: IP68
Motor: EC-motor
Supply Voltage: 24 V DC ± 10 % galvanically separated between control and motor and bus
Measurement System: Absolute, optical-magnetic
Accuracy: ± 0.9°
Intermittence: 20% (basis time 600 s)
Manual Adjustment: No
Brake: No
Material: All components in stainless steel. (Except for feather key, if available.)

Every care has been taken to ensure the accuracy of the information in this document, but we take no liability for any errors or omissions. We reserve the right to make changes without prior notice.

Performance Curve - Direct Drives PSW

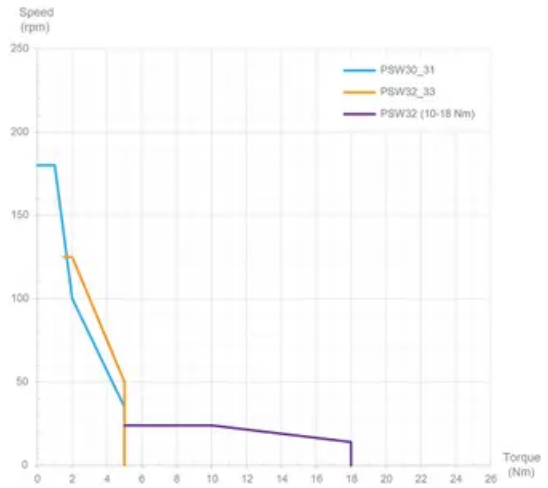

General Data

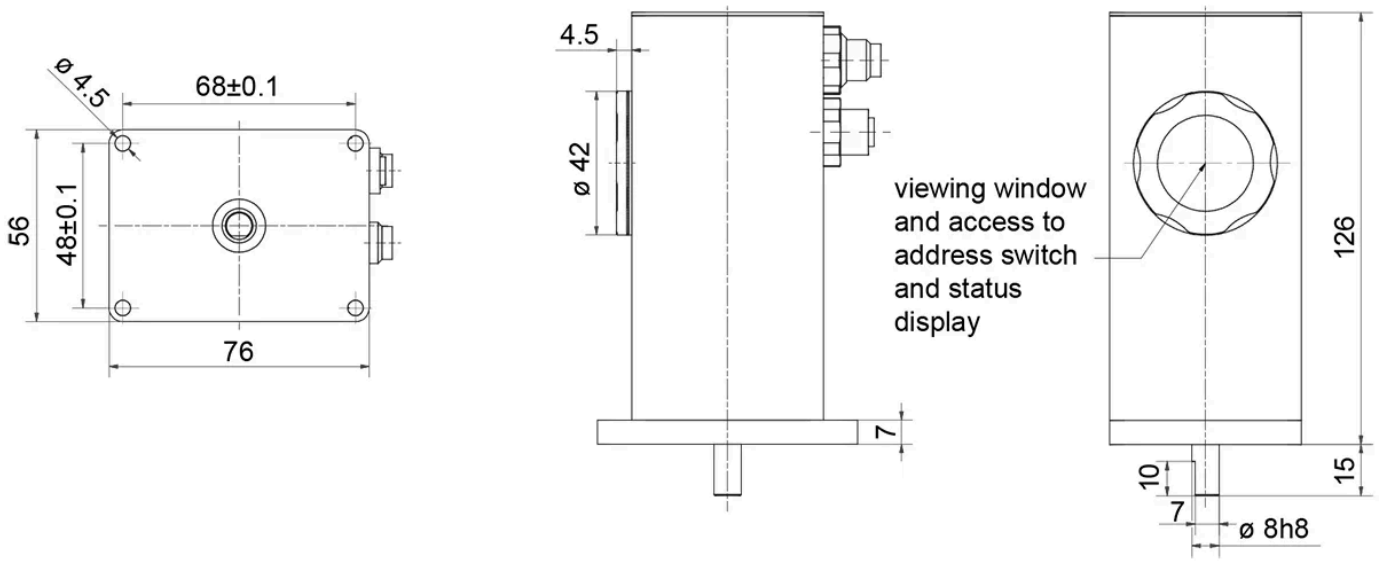

Designation	Nominal Torque (Nm)	Nominal Speed (rpm)	Nominal Current (A)	Self-holding Torque (Nm)	Positioning Range (rot.)
PSW 311-8V	1	180	2.2	0.5	250
PSW 312-8V	2	100	2.2	1	250
PSW 315-8V	5	35	2.2	2.5	250

Every care has been taken to ensure the accuracy of the information in this document, but we take no liability for any errors or omissions. We reserve the right to make changes without prior notice.