Swivel/clevis mount MASU

Dimensions in mm.

Mounting screws are included.

Material: Aluminium (MASU 45: Aluminium and galvanized steel)



Every care has been taken to ensure the accuracy of the information in this document, but we take no liability for any errors or omissions. We reserve the right to make changes without prior notice.

General Data

Designation	Description	Compatible with	Material	Fmax (N)	Mass (kg)
MASU 25 - 108243	MASU 25	MCE 25	Aluminium	F MCE	0.02
MASU 32 - 108244	MASU 32	MCE 32	Aluminium	F MCE	0.03
MASU 45 - 108245	MASU 45	MCE 45	Aluminium and galvanized steel	F MCE	0.12

Dimensions

Size 25, 32

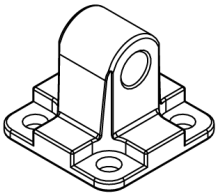

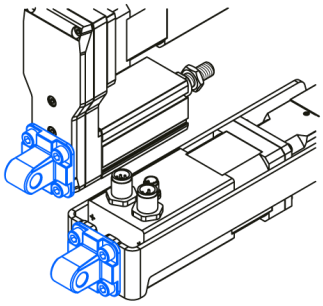

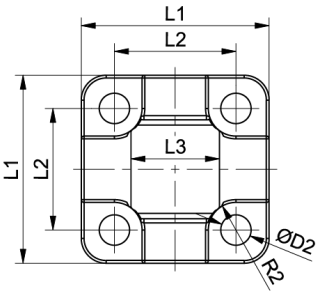

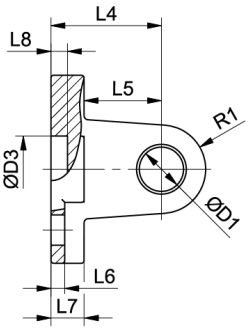

Size 45

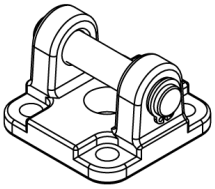

Simple support

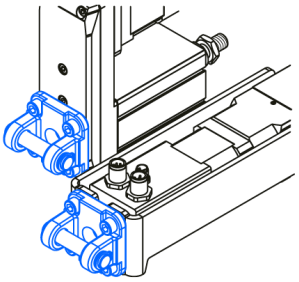

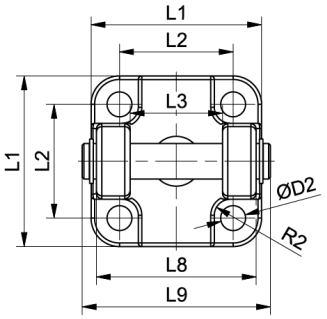

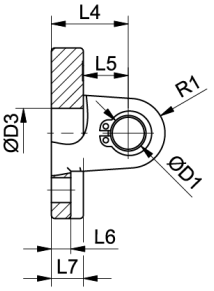

Designation	L1	L2	L3	L4	L5	L6	L7	L8	L9
MASU 25 - 108243	27 (±0.2)	18	12	16 (±0.2)	10	2.6	6	3	-
MASU 32 - 108244	34 (±0.2)	22	16	20 (±0.2)	14	2.6	6	3	-
MASU 45 - 108245	48 (±0.2)	32	26	22 (±0.2)	13	5.5	9	45	53

Designation	D1	D2	D3	R1	R2
MASU 25 - 108243	6	4.5	10 (h11)	6	4.5
MASU 32 - 108244	8	5.5	12 (h11)	8	5
MASU 45 - 108245	10	6.6	14 (h11)	10	5.5

Every care has been taken to ensure the accuracy of the information in this document, but we take no liability for any errors or omissions. We reserve the right to make changes without prior notice.