Rollers for Solid Version

CONCENTRIC ROLLER
RSBN: Standard bearing steel
RXBN: Stainless bearing steel (AISI-440C)

ECCENTRIC ROLLER
RSBA: Standard bearing steel
RXBA: Stainless bearing steel (AISI-440C)

Standard slider is with 3 rollers. The rollers can also be mounted directly into your application or we can make special sliders according to your need. Please contact Rollco for more information.



Every care has been taken to ensure the accuracy of the information in this document, but we take no liability for any errors or omissions. We reserve the right to make changes without prior notice.

General Data

Designation	Weight (kg)
RSBN20-2Z	0.006
RXBN20-2RS	0.006
RSBA20-2Z	0.006
RXBA20-2RS	0.006
RSBN30-2Z	0.022
RXBN30-2RS	0.022
RSBA30-2Z	0.022
RXBA30-2RS	0.022
RSBN45-2Z	0.07
RXBN45-2RS	0.07
RSBA45-2Z	0.07
RXBA45-2RS	0.07

Dimensions

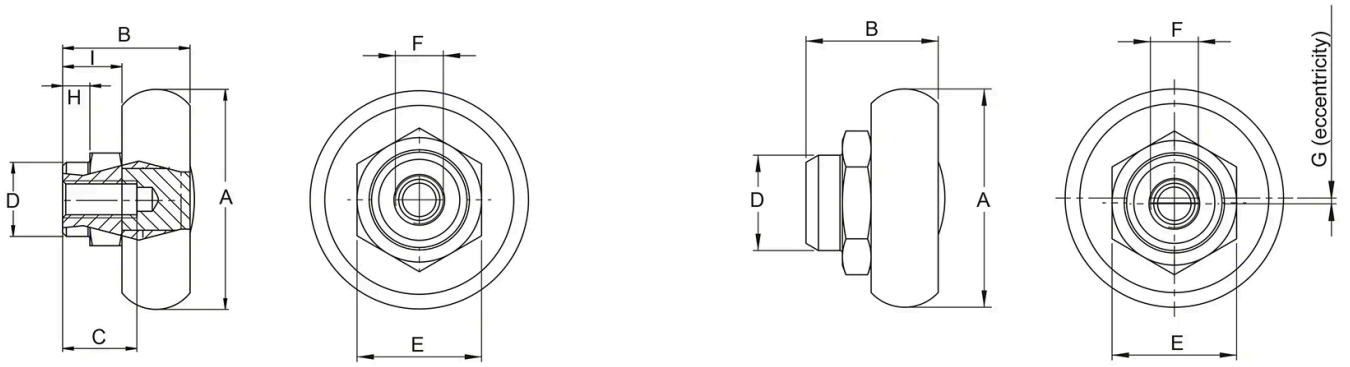

Designation	A	B	C	D	E	F	G	H	I
RSBN20-2Z	14 +0/-0.04	8.7	6	6 -0.02/-0.08	8	M4	-	1.8	4.7
RXBN20-2RS	14 +0/-0.04	8.7	6	6 -0.02/-0.08	8	M4	-	1.8	4.7
RSBA20-2Z	14 +0/-0.04	8.7	6	6 -0.02/-0.08	8	M4	0.5	1.8	4.7
RXBA20-2RS	14 +0/-0.04	8.7	6	6 -0.02/-0.08	8	M4	0.5	1.8	4.7
RSBN30-2Z	22.8 +0/-0.05	13.8	7	10 -0.04/-0.10	13	M5	-	3.8	6.8
RXBN30-2RS	22.8 +0/-0.05	13.8	7	10 -0.04/-0.10	13	M5	-	3.8	6.8
RSBA30-2Z	22.8 +0/-0.05	13.8	7	10 -0.04/-0.10	13	M5	0.6	3.8	6.8
RXBA30-2RS	22.8 +0/-0.05	13.8	7	10 -0.04/-0.10	13	M5	0.6	3.8	6.8
RSBN45-2Z	35.6 +0/-0.06	20.6	12	12 -0.04/-0.10	15	M6	-	4.5	9.6
RXBN45-2RS	35.6 +0/-0.06	20.6	12	12 -0.04/-0.10	15	M6	-	4.5	9.6
RSBA45-2Z	35.6 +0/-0.06	20.6	12	12 -0.04/-0.10	15	M6	0.8	4.5	9.6
RXBA45-2RS	35.6 +0/-0.06	20.6	12	12 -0.04/-0.10	15	M6	0.8	4.5	9.6

Every care has been taken to ensure the accuracy of the information in this document, but we take no liability for any errors or omissions. We reserve the right to make changes without prior notice.