Slider Solid Version

LSBE: Stainless steel body (AISI 304) and standard steel rollers
LXBE: Stainless steel body (AISI 304) and stainless steel rollers (AISI-440C)



Every care has been taken to ensure the accuracy of the information in this document, but we take no liability for any errors or omissions. We reserve the right to make changes without prior notice.

General Data

Designation	Weight (kg)	Max. Permissible Radial Load Fmax (N)	Max. Permissible Axial Load Fmax (N)
LSBE20-60-2Z	0.04	300	170
LSBE30-80-2Z	0.17	800	400
LSBE45-120-2Z	0.60	1600	860
LXBE20-60-2RS	0.04	300	170
LXBE30-80-2RS	0.17	800	400
LXBE45-120-2RS	0.60	1600	860

Dimensions

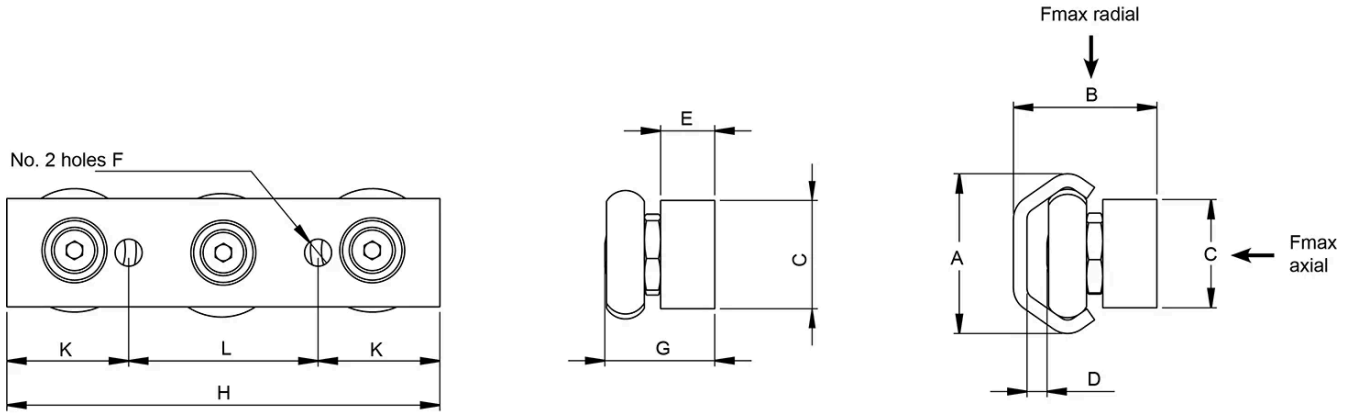

Designation	A	B	C	D	E	F	G	H	K
LSBE20-60-2Z	19.2	17.8	10	2.65	6	M5	13.15	60	20
LSBE30-80-2Z	29.5	26.5	20	3.7	10	M6	20.3	80	22.5
LSBE45-120-2Z	45.7	41	30	5.1	15	M8	31.9	120	32.5
LXBE20-60-2RS	19.2	17.8	10	2.65	6	M5	13.15	60	20
LXBE30-80-2RS	29.5	26.5	20	3.7	10	M6	20.3	80	22.5
LXBE45-120-2RS	45.7	41	30	5.1	15	M8	31.9	120	32.5

Designation	L
LSBE20-60-2Z	20
LSBE30-80-2Z	35
LSBE45-120-2Z	55
LXBE20-60-2RS	20
LXBE30-80-2RS	35
LXBE45-120-2RS	55

Every care has been taken to ensure the accuracy of the information in this document, but we take no liability for any errors or omissions. We reserve the right to make changes without prior notice.