Standard grease nipple

When external NBR seal is chosen (SN), please use long type grease nipple.



Every care has been taken to ensure the accuracy of the information in this document, but we take no liability for any errors or omissions. We reserve the right to make changes without prior notice.

A-M3

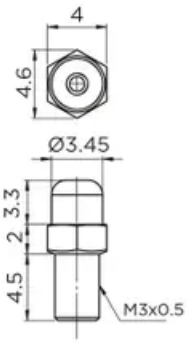

A-M3-L

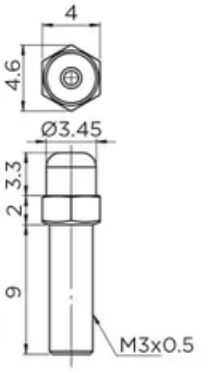

B-M3

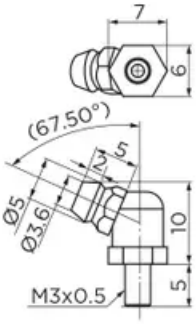

B-M3-L

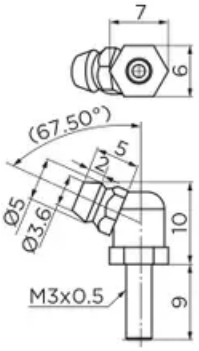

A-M6

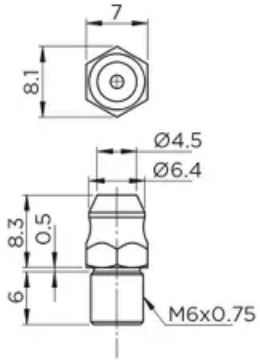

A-M6-L

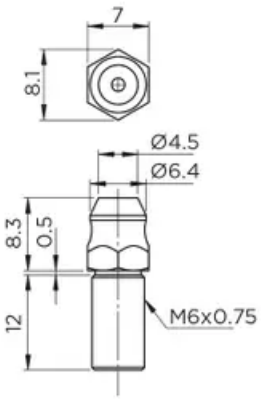

Every care has been taken to ensure the accuracy of the information in this document, but we take no liability for any errors or omissions. We reserve the right to make changes without prior notice.

B-M6

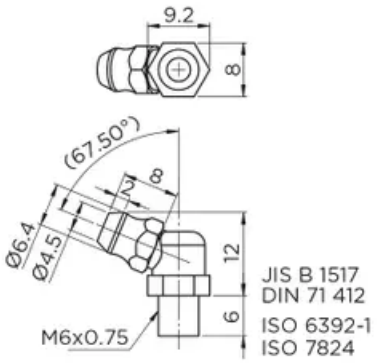

B-M6-L

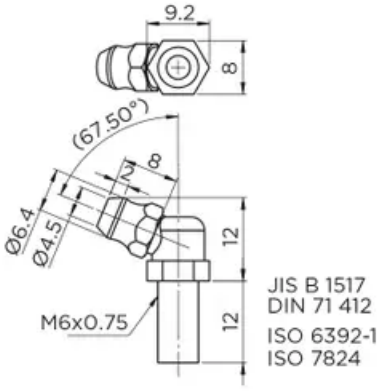

B-PT1/8

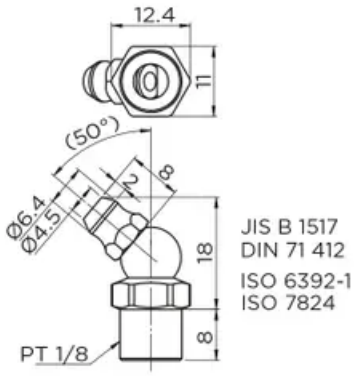

B-PT1/8-L

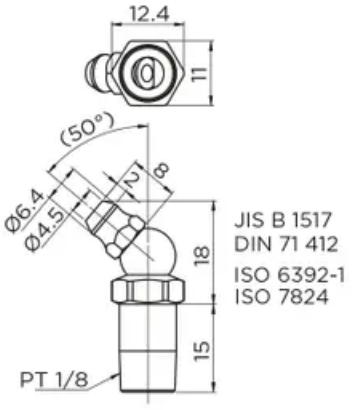

Port sizes for grease nipple

Type	Port size		Top o-ring size
	Front	Side	
HRC/ARC 15	M3	M3	P3
HRC/ARC 20	M3	M3	P4
HRC/ARC/ERC 25	M6	M3	P4
HRC/ARC 30	M6	M6	P5
HRC/ARC 35	M6	M6	P5
HRC/ARC 45	PT1/8	M6	P5
HRC/ARC 55	M6	M6	P5
WRC 21/15	M3	M3	P3
WRC 27/20	M3	M3	P4

General Data

Designation	Compatible with	Remark	Thread	Type
A-M3	Block size 15	-	M3x0.5	Normal
A-M3-L	Block size 15	For block with external seal (SN)	M3x0.5	Normal
B-M3	Block size 20	-	M3x0.5	Normal

Every care has been taken to ensure the accuracy of the information in this document, but we take no liability for any errors or omissions. We reserve the right to make changes without prior notice.

Designation	Compatible with	Remark	Thread	Type
B-M3-L	Block size 20	For block with external seal (SN)	M3x0.5	Long
A-M6	Block size 25, 30, 35 & 55	-	M6x0.75	Normal
A-M6-L	Block size 25, 30, 35 & 55	For block with external seal (SN)	M6x0.75	Long
B-M6	Block size 25, 30, 35 & 55	-	M6x0.75	Normal
B-M6-L	Block size 25, 30, 35 & 55	For block with external seal (SN)	M6x0.75	Long
B-PT1/8	Block size 45	-	PT 1/8	Normal
B-PT1/8-L	Block size 45	For block with external seal (SN)	PT 1/8	Long

Every care has been taken to ensure the accuracy of the information in this document, but we take no liability for any errors or omissions. We reserve the right to make changes without prior notice.