ERC ML

Slim, long block with low height, with or without ball chain. Use together with HRC/HRU rail.



For high load applications or any application where severe chock-loads may occur, the standard version offers better safety margins by its higher static limit (C0). For light to medium loads where a very long lifetime is required, the ball-cage will show superior life span and reliability.

Please note that ball chain versions must never be used for linear speeds exceeding 3 m/s!

Size 25 delivered with angled standard nipple.

Lubrications injections ports on the block:
N1: Front of the block. All blocks are delivered with front mounted standard grease nipple.
N2: Side of the block. The side lubrication injection port is sealed on delivery to prevent leakage of lubrication.
N3: Top of the block with an O-ring seal. The top lubrication injection port is sealed on delivery to prevent leakage of lubrication.

Dimensions in mm.

Lead times in the table below are only indications. Choice of preload, accuracy class and other options will affect lead time. Please contact us for exact delivery time for your request.

For more information about calculation of life, load rating and static moment see Technical information.

Every care has been taken to ensure the accuracy of the information in this document, but we take no liability for any errors or omissions. We reserve the right to make changes without prior notice.

General Data

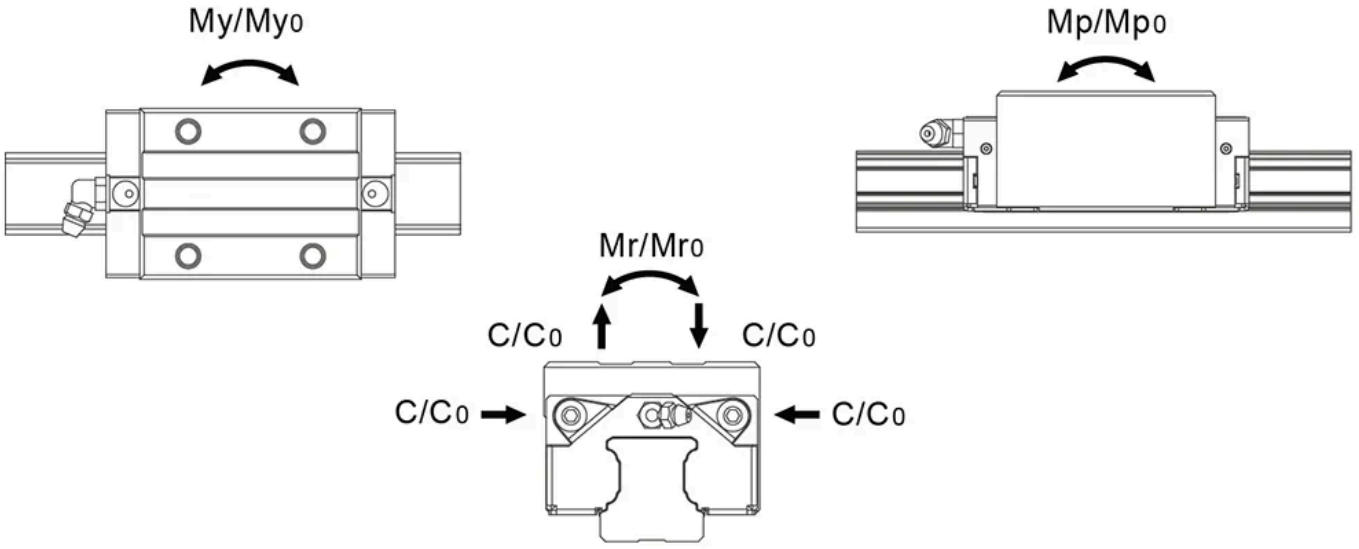

Designation	Dynamic Load Capacity C (N)	Static Load Capacity C0 (N)	Static Moment Mp0 (Nm)	Static Moment Mr0 (Nm)	Static Moment My0 (Nm)
ERC25ML	30700	57700	710	735	710

Designation	Dynamic Moment Mr (Nm)	Dynamic Moment Mp (Nm)	Dynamic Moment My (Nm)	Weight Block (g)
ERC25ML	391	378	378	610

Dimensions

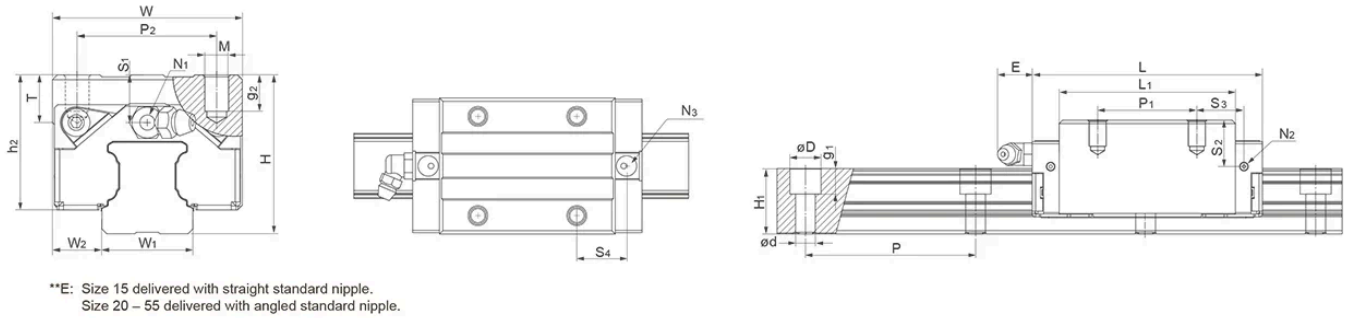

**E: Size 15 delivered with straight standard nipple.
Size 20 – 55 delivered with angled standard nipple.

Designation	L	H	W	L1	H1	h2	W1	W2	S1
ERC25ML	105	36	48	86	23	30	23	12.5	8

Designation	S2	S3	S4	E	T	N1	N2	N3	M x g2	D x d x g1
ERC25ML	12.3	21	22	12	8	M6x7.5	M3x6.5	P4	M6x9	11 x 7 x 9

Every care has been taken to ensure the accuracy of the information in this document, but we take no liability for any errors or omissions. We reserve the right to make changes without prior notice.

Designation	P1	P2	Hole Pitch (P)
ERC25ML	50	35	60

Every care has been taken to ensure the accuracy of the information in this document, but we take no liability for any errors or omissions. We reserve the right to make changes without prior notice.