Wide MRU-W Rail

Tapped from bottom.

Dimensions in mm.

Please note that blocks and rails are not sold separately for sizes 2 and 3. Due to the small dimensions, blocks and sliders must be assembled and matched carefully to ensure correct quality and tolerances.

Material: Stainless steel



Every care has been taken to ensure the accuracy of the information in this document, but we take no liability for any errors or omissions. We reserve the right to make changes without prior notice.

General Data

Designation	Weight Rail (g/m)
MRU3W	105
MRU5W	280
MRU7W	516
MRU9W	940
MRU12W	1472
MRU15W	2818

Dimensions

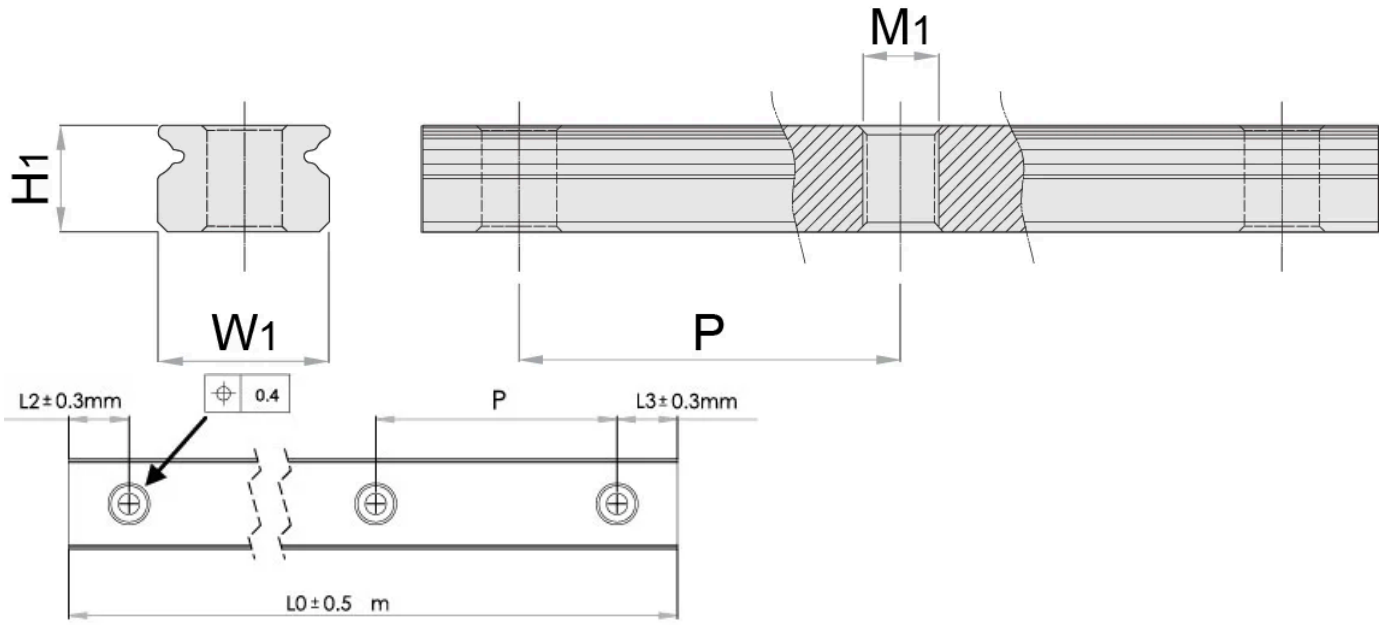

Designation	H1	W1	Hole Pitch (P)	M1
MRU3W	2.7	6	15	M3x0.5
MRU5W	4	10	20	M3x0.5
MRU7W	5.2	14	30	M4x0.7
MRU9W	7.3	18	30	M4x0.7
MRU12W	8.5	24	40	M5x0.8
MRU15W	9.5	42	40	M5x0.8

Every care has been taken to ensure the accuracy of the information in this document, but we take no liability for any errors or omissions. We reserve the right to make changes without prior notice.