SFKR

SFKR are miniature ball screws, best suitable for small manipulators, instruments etc. They enable very high positioning precision and stiffness because of the small lead. For optimal operation they do, however, require very high cleanliness and accuracy when built into an application.



A limited service- and prototyping-stock of basic grade with rolled spindles (C7) and axial play in the nut (P0) is kept available. For more demanding applications or larger quantities, contact us.

Standard nuts are with scrapers. Other types on request.

All dimensions in mm.

Material: Ball screw: S55C (according to standard JIS G4051) / Ball nut: SCM415H (according to standard JIS G4053)

Every care has been taken to ensure the accuracy of the information in this document, but we take no liability for any errors or omissions. We reserve the right to make changes without prior notice.

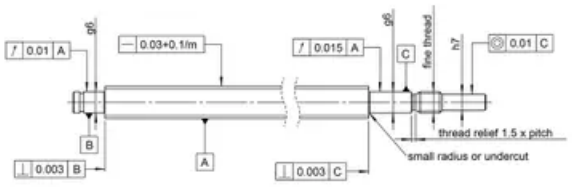

Recommended dimensional and geometrical tolerances for typical machining of miniature ball screws.
Undercuts, radii and thread reliefs to be checked for suitability for chosen bearing- and lock-nut solution.

General Data

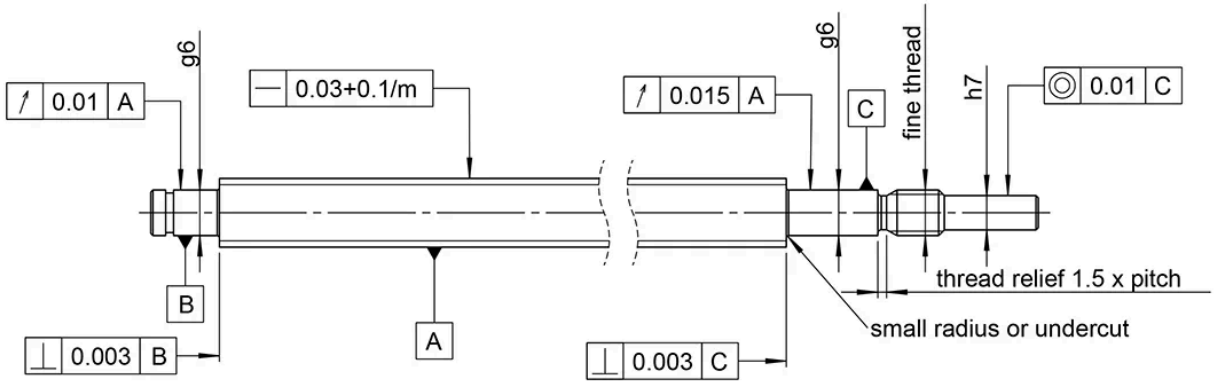

Recommended dimensional and geometrical tolerances for typical machining of miniature ball screws.
Undercuts, radii and thread reliefs to be checked for suitability for chosen bearing- and lock-nut solution.

Designation	Compatible with	Dynamic Load Ratings Ca (N)	Static Load Ratings C0a (N)	Ball diameter	Turns x circuits
SFKR0601	—	1110	2240	0.8	1 x 3
SFKR0801	FKN06	1610	4030	0.8	1 x 4
SFKR1002	FKN06	2430	5690	1.2	1 x 3
SFKR1202	BKN08 / FKN08 / BFN08	3340	9060	1.2	1 x 4
SFKR1402	BKN10 / FKN10 / BFN10 / FFN10	3540	10530	1.2	1 x 4

Every care has been taken to ensure the accuracy of the information in this document, but we take no liability for any errors or omissions. We reserve the right to make changes without prior notice.

Dimensions

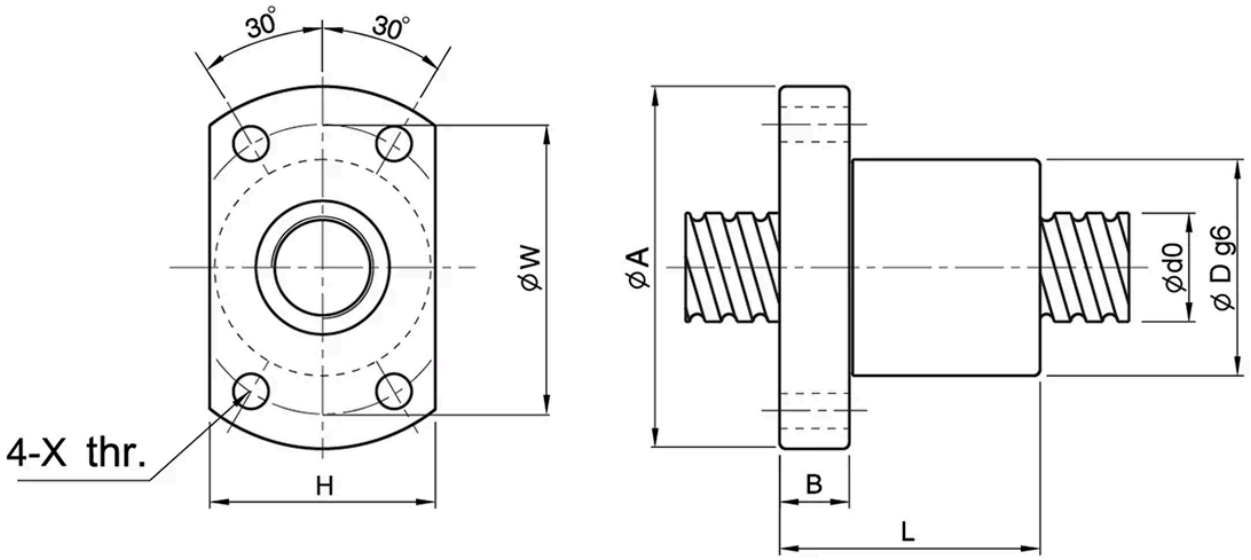

Designation	A	B	D	H	L	W	X	d0 x Lead
SFKR0601	24	3.5	12	16	15	18	3.4	6 x 1
SFKR0801	27	4	14	18	16	21	3.4	8 x 1
SFKR1002	35	5	18	22	28	27	4.5	10 x 2
SFKR1202	37	5	20	24	28	29	4.5	12 x 2
SFKR1402	40	6	21	26	23	31	5.5	14 x 2

Every care has been taken to ensure the accuracy of the information in this document, but we take no liability for any errors or omissions. We reserve the right to make changes without prior notice.